Arc Modular Lounge

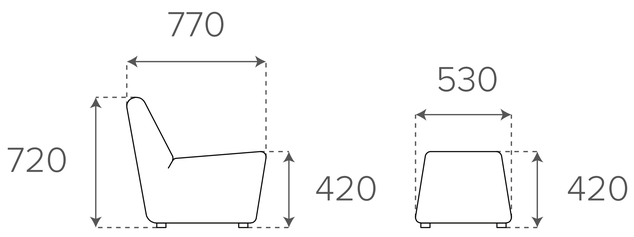

Arc and Ottoman
Side View

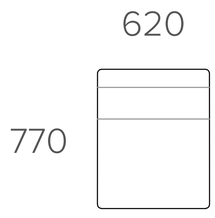

Arc Single Seater

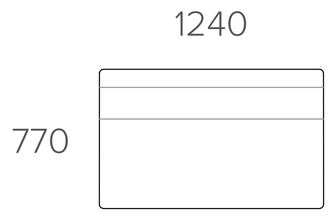

Arc 2 Seater

Arc 3 Seater

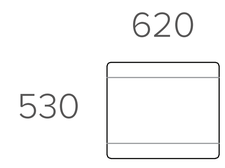

Arc Ottoman

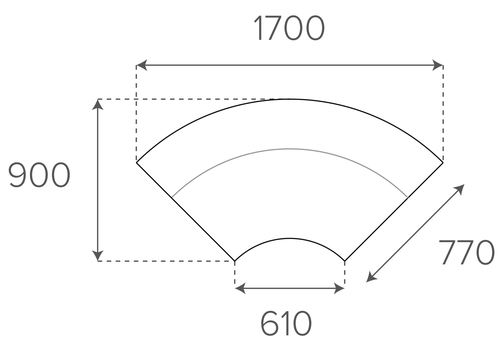

Arc Concave 90˚

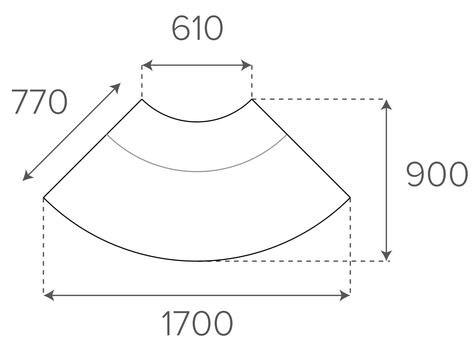

Arc Convex 90˚

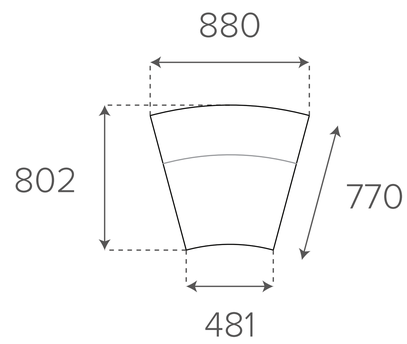

Arc Concave 30˚

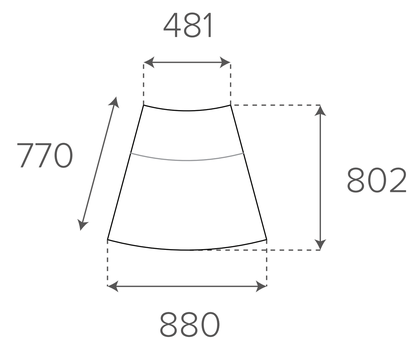

Arc Convex 30˚

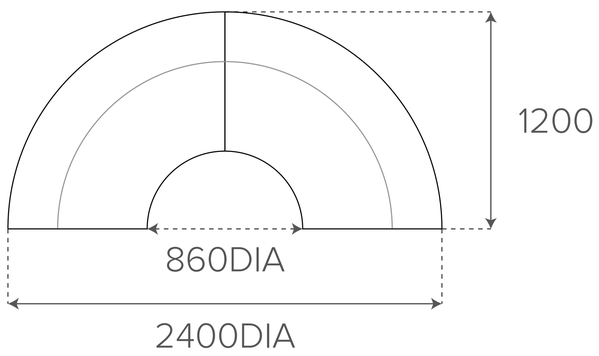

2x Arc Concave 90˚ Segments

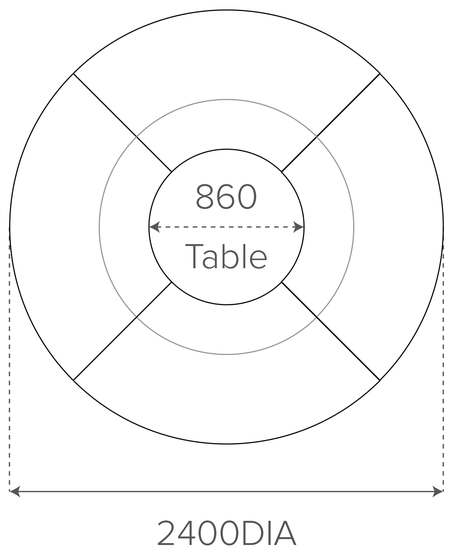

4x Arc Convex 90˚ Segments

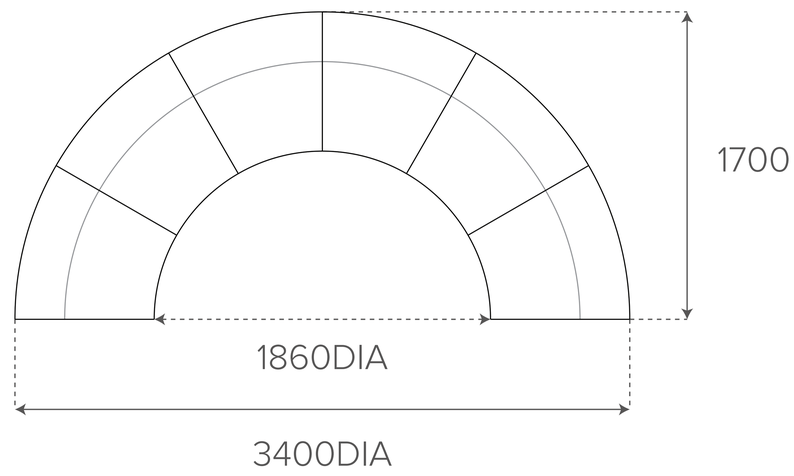

12x Arc Concave 30˚ Segments

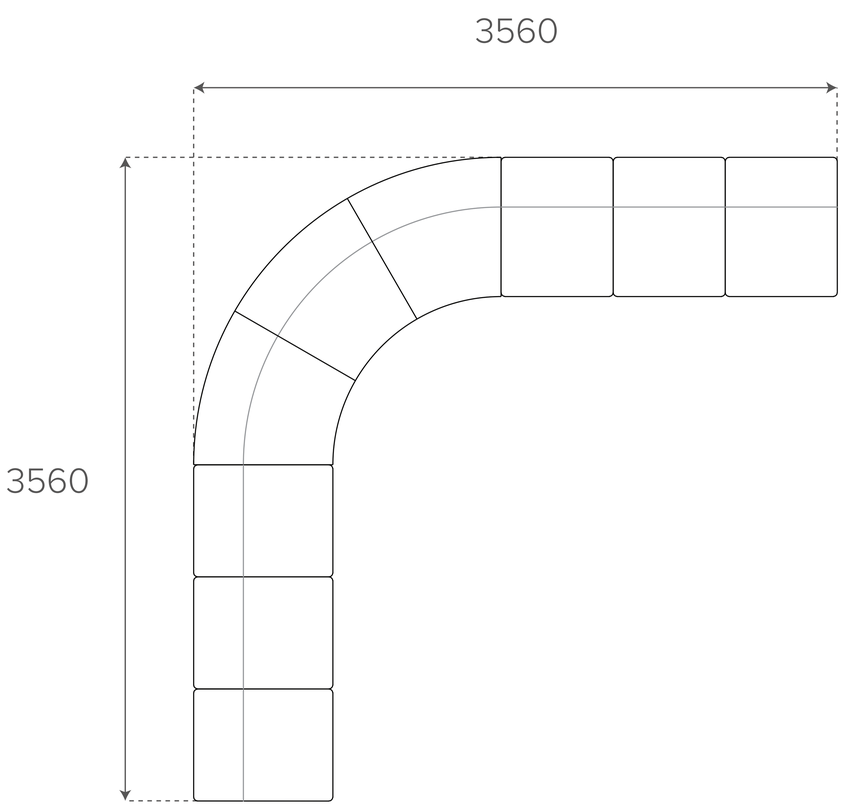

6x Arc Single Seater
3x Arc Concave 30˚ Segments

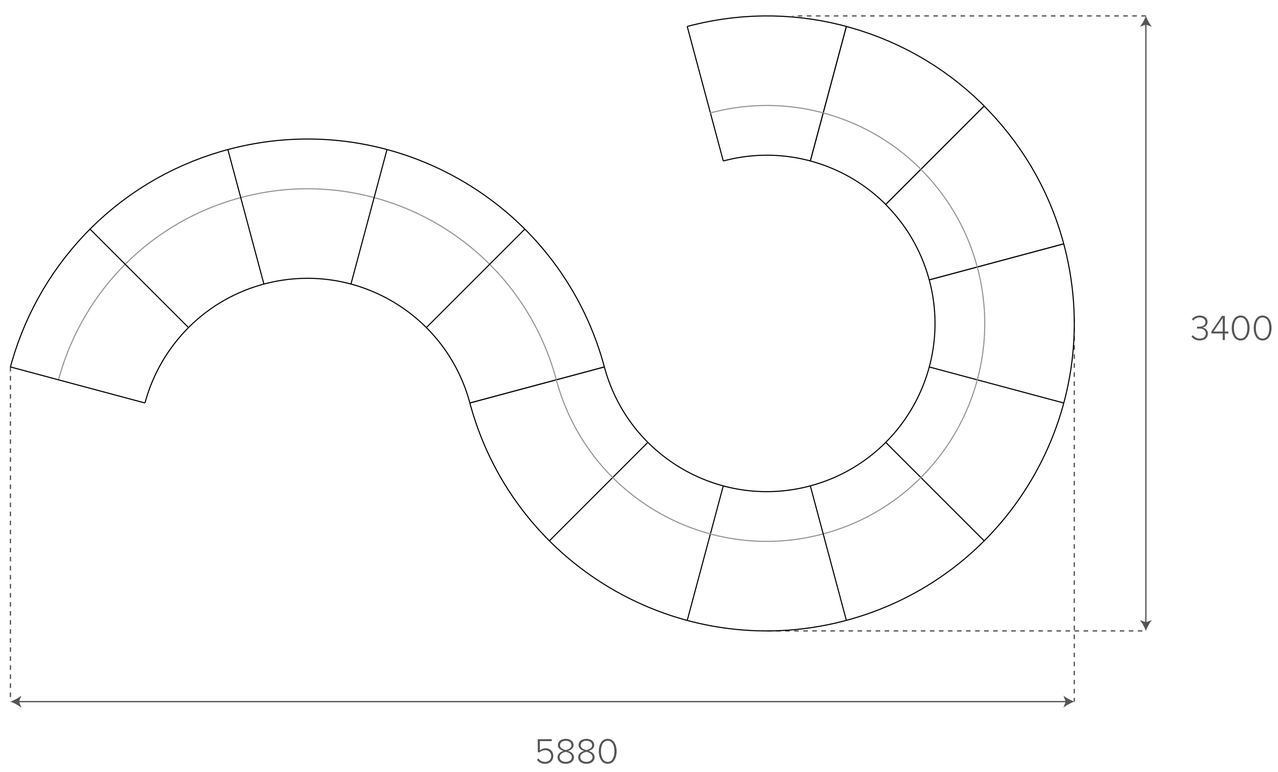

5x Arc Concave 30˚ Segments
9x Arc Convex 30˚ Segments

INNER/SPACE